IEEE Access
Multidisciplinary : Rapid Review : Open Access Journal

Received 27 August 2025, accepted 15 September 2025,
date of publication 22 September 2025, date of current version 10 October 2025.

Digital Object Identifier 10.1109/ACCESS.2025.3612932

RESEARCH ARTICLE

Blind-Aided Target Detection Algorithm Based on Cascading Feature Pyramids With Lightweight Dual-Path Downsampling

YUZHOU LIU[1], YILU HAO[1,2], SHU GONG[1], RONG-GUEI TSAI[1], CAIHUA QIU[1], AND MUYIN WANG[1]

[1]Department of Computer Science, Guangdong University of Science and Technology, Dongguan 523668, China
[2]College of Computer Science and Technology, Dongguan University of Technology, Dongguan 523808, China

Corresponding author: Shu Gong (gongshu@gdust.edu.cn)

This work was supported in part by the 2024 Guangdong Key Construction Discipline Research Capacity Enhancement Project under Grant 2024ZDJS067, in part by the 2023 Guangdong University Innovation Team Project under Grant 2023KCXTD046, in part by the 2022 Guangdong Provincial Key Construction Discipline Scientific Research Capacity Enhancement Project under Grant 2022ZDJS147, and in part by the 2021 Guangdong Key Construction Discipline Scientific Research Capacity Enhancement Project under Grant 2021ZDJS116.

ABSTRACT Owing to the high frequency of missed detection of small targets in complex environments, insufficient multi-scale target feature extraction, and high computational complexity of the algorithm, it is a difficult challenge for intelligent blind guide devices in the field of target detection algorithms. To solve the existing problems and challenges, this study proposes a Kinective-Journey YOLO (KJ-YOLO) target detection algorithm customized for target detection in complex environments. It uses the idea of cascaded feature pyramids to enhance the expression ability of feature maps through an attention mechanism and feature weighting to realize a more complex feature fusion mechanism: the Scale Balancing Aggregation Module (SBA Module). It improves C3k2 through an intelligent segmentation and reorganization mechanism of feature channels and residual cross-layer connections to achieve feature reuse, thereby reducing computational complexity and improving the C3K2-DEConv module of small-target feature extraction. The feature extraction and fusion of small and multi-scale targets are improved, and the lightweight downsampling module Adown is introduced to reduce the computational complexity of the model. A large number of experiments on the PASCAL VOC 2007 public dataset show that, compared with the baseline model, KJ-YOLO's 'mAP' index rate is increased by 3.3% to 67.3%, and mAP50-95 is increased by 2.3% to 44.8%. The number of parameters and the amount of calculation are also controlled at 2.9M and 114.4 FLOPs/G, which not only improves the accuracy but also meets the requirements of lightweight deployment and real-time detection of a smart device for blindness assistance.

INDEX TERMS KJ-YOLO, artificial intelligence, deep learning, cascade feature pyramid.

I. INTRODUCTION

With the deep integration of artificial intelligence and Internet of Things (IoT) technology, smart wearable devices are gradually becoming important carriers for visually impaired groups to perceive the environment. According to statistics, approximately 285 million visually impaired people in the world face the serious challenge of independent travel. At the same time, traditional guide devices have significant limitations in terms of dynamic scene understanding and real-time interaction. In recent years, single-stage target detection algorithms represented by the YOLO series have demonstrated unique advantages in the environment perception module of assistive visual impairment systems, based on their end-to-end processing architectures and deep learning training methods. These devices have shown great potential for the development of smart wearable device applications. However, existing research focuses on the optimization of

The associate editor coordinating the review of this manuscript and approving it for publication was Senthil Kumar.

© 2025 The Authors. This work is licensed under a Creative Commons Attribution 4.0 License.
For more information, see https://creativecommons.org/licenses/by/4.0/

detection accuracy in general-purpose scenarios, ignoring the unique engineering constraints and scenario-specificities of blindness-assisted devices, resulting in a significant gap between the deployment effectiveness of the algorithms in real complex environments and user experience.

Traditional YOLO algorithms face three key challenges when deployed to resource-constrained devices: (1) the contradiction between real-time sensing requirements in dynamic and complex environments and the limited arithmetic power of edge devices; (2) the problem of omission of small targets and the degradation of feature discrimination due to extreme scenarios, such as occluded targets, blurred motions, and sudden changes in lighting; and (3) the problem of balancing the simultaneous detection accuracy of multi-scale targets and computational overhead. Although YOLO11 optimizes computational efficiency through the 'CSP' structure and C3k2 module, its inherent design still has significant limitations in blindness-assisted scenarios: first, the convolutional kernel with a fixed geometric structure is difficult to adapt to the frequency-domain feature shifts induced by fast-moving targets (e.g., moving vehicles); second, the parameter redundancy of cascaded convolutional layers leads to an insufficient energy-efficiency ratio of the model in the GPU on the mobile side; furthermore, the anisotropic feature fusion mechanism is susceptible to complex occlusion interference, and the false detection rate is as high as 18.7% in the Cityscapes-OCC benchmark test. These shortcomings seriously restrict the reliability and user experience of blindness-assisting devices in real-world environments.

To address the above problems, this study proposes a KJ-YOLO target detection algorithm. 'KJ' is an acronym for 'Kinective-Journey,' reflecting the core objective of the algorithm to provide dynamic (kinetic) guarantees to ensure the user's movement (journey), which is a lightweight dynamic network architecture algorithm designed for real-time target detection on resource-limited devices. The main contributions of this study are as follows.

A. RECONSTRUCTING THE NECK NETWORK

YOLOv11n builds a feature fusion network based on the PSA architecture of the C2PSA module; however, as the network deepens, the resolution of the feature map decreases, which can easily lead to the loss of small-target features and affect the detection performance. In this paper, a self-developed two-way feature fusion mechanism, the SBA module based on a cascading feature pyramid structure, is proposed, which enhances the expression ability of the feature map through the attention mechanism and feature weighting, improves the detection performance of small targets, and comprehensively reconfigures the necking network using the SBA module.

B. IMPROVEMENT OF THE CORE MODULE C3K2

Practical applications of intelligent blind assistive devices need to detect multi-directional edge responses, but C3k2 is difficult to explicitly encode gradient directionality with ordinary convolutional kernels and cannot recognize obstacles in different directions. In this study, on the C3k2 module of the original model YOLOv11n, we draw on the idea of a cascade pyramid structure and innovate to obtain the C3K2-DEConv module, introduce the detail-enhanced convolutional DEConv, and construct the joint spatial-frequency-domain sensing unit, which enhances the ability of image detail extraction and multi-direction target recognition.

C. REPLACEMENT OF THE DOWNSAMPLING MODULE

Faced with the problem that deploying YOLO target detection algorithm in resource-constrained smart devices for the blind will lead to high computational complexity and slow operation speed of the devices, this paper introduces a lightweight ADowm downsampling module, which reduces the complexity of the model by decreasing the number of parameters, and the lightweight downsampling operation makes it possible to reduce the size of the feature maps while retaining the key information, thus improving the accuracy of the target detection, which further improves the target detection accuracy in resource-constrained devices. This further improves the operational speed of resource-constrained devices.

D. CONDUCTING EXPERIMENTS AND ANALYSIS

Extensive experiments on the PASCAL VOC 2007 open dataset have shown that KJ-YOLO can be better adapted to applications on intelligent blind assistive devices to accomplish real-time, accurate target detection.

II. RELATED WORK

A. TARGET DETECTION

Huang et al. [1] designed a lightweight and efficient multi-scale feature expansion necking module in the YOLO11 network for high-accuracy detection of ships in any direction in remote sensing imagery, which improved 'mAP'@0.5 by 3.1% and mAP@0.5:0.95 by 3.3% on the HRSC2016 dataset, and improved mAP@ on the MMShip dataset by 0.5 by 1.9% and mAP@0.5:0.95 by 1.3% on the MMShip dataset. Alkhammash et al. [2] developed a hybrid model combining YOLOv11n and MobileNetV2 using YOLO11, which achieved exceptionally high accuracy, recall, and F1 scores. The YOLOv11s showed high accuracy and recall in classes A and Zhang et al. [3] proposed an improved YOLO11-based Pear detection model-YOLO11-Pear, which introduced the C2PSS module to replace the original C2PSA module, and added a small target detection layer to improve the model's ability to detect small pears.

The YOLO family of detection algorithms, although proficient in spatial feature extraction for accurate detection, is often insufficient for dealing with small, dynamically moving objects, especially in handling real-time data updates and resource efficiency. Soudeep et al. [4] introduced a novel framework, DGNN-YOLO, which integrates Dynamic Graph Neural Networks (DGNNs) with YOLO11 to address these limitations and experimentally validated the

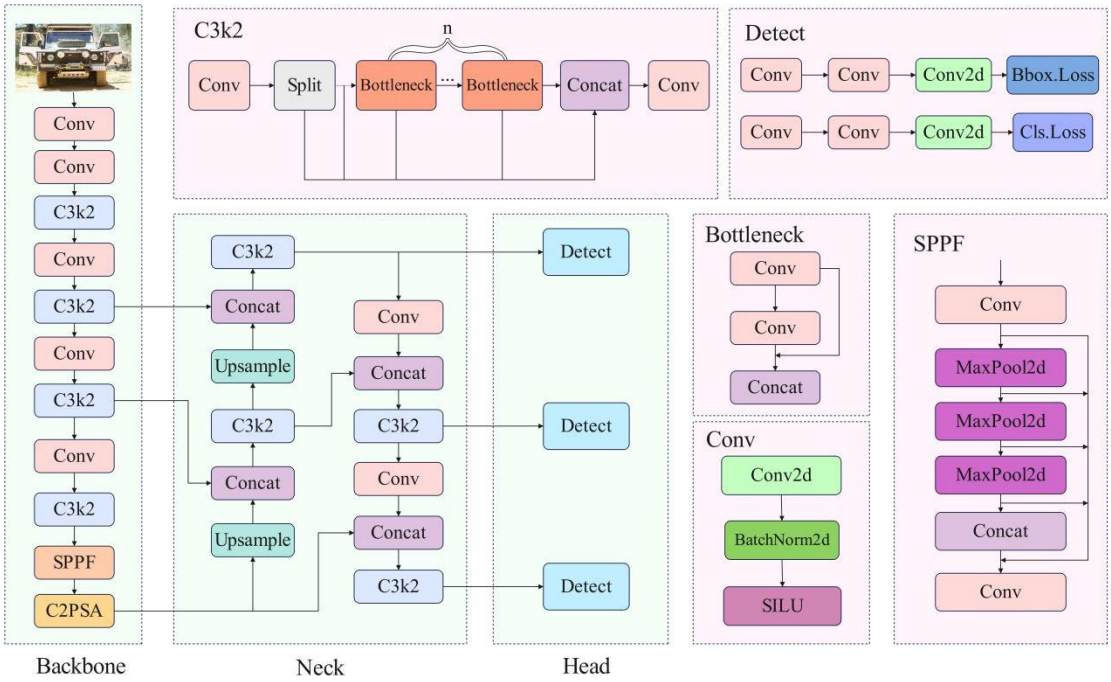

FIGURE 1. YOLO11 network architecture diagram.

performance of the framework, achieving 0.8382 precision, 0.6875 recall, and 0.6476 mAP@0.5:0.95 accuracy improvement. Wang et al. [5] proposed an improved small-target detection method, PC-YOLO11s, based on the YOLO11 model, whose core innovation is to optimize the structure of the detection network by adding the P2 layer to extract small target features, removing the P5 layer, and introducing the coordinate space attention mechanism to improve the detection accuracy. Experiments show that PC-YOLO11s have excellent performance in small-target detection tasks with high accuracy and good generalization ability, which can meet the requirements of practical applications. Yu et al. [6] proposed a real-time defect-detection method to improve YOLO, by replacing the residual module with the LSand-Glass module to reduce the loss, Neck used ghost convolution to extract the features and added CBAM to improve the accuracy of small-size defect detection, and SIoU was used to enhance the target detection capability. Chen et al. [7] proposed a new target detection algorithm, YOLO-MS, which is based on the convolution of basic block features with multiple branches and different kernel sizes, to improve the performance of target detection at different scales. Extensive experiments show that YOLO-MS outperforms recent state-of-the-art real-time target detectors, such as YOLO-v7, RTMDet, and YOLO-v8. Its AP score on the MS COCO dataset is 42%+, which is approximately 2% higher than that of RTMDet with the same model size. RTMDet is about 2% higher. In addition, the work of Chen et al. can be used as a plug-and-play module in other YOLO models. Chen et al.'s method significantly improved the AP, APL, and AP of YOLOv8-N from 18%+, 52% +, and 37% + to 20% +, 55% +, and 40% +, respectively, with fewer parameters and MACs. Ying et al. [8] constructed a model based on YOLOv5s that adds a larger scale prediction layer instead of the smallest scale prediction layer, thus improving the detection accuracy of ultra-small targets.

In this study, the YOLO11 model is used as the benchmark model for improvement, and its network structure is mainly composed of three parts: the backbone network (backbone), neck network (neck), and prediction network (Head), The specific architecture is shown in FIGURE 1. Among them, the main function of the backbone is to perform feature extraction, which consists of a Conv convolution module, C3k2 module, and SPPF module through serial superposition, which is used to extract feature information from the input image and form feature maps. The Neck part is responsible for fusing the shallow detailed features of the image with deeper semantic features, and its design draws on the ideas of PANet and FPN [9], which effectively improves the expressive ability of the network by realizing the information fusion of feature maps of different depths. The main task of the head part is to generate the output results of the target detection, which adopts the structure of a decoupled head to classify the target and localization prediction for features of different scales.

B. TECHNOLOGIES FOR ASSISTING THE BLIND

The innovative BlindSpace application developed by Pongiannan et al. [10] utilizes cutting-edge image description and object detection technologies to allow users to capture

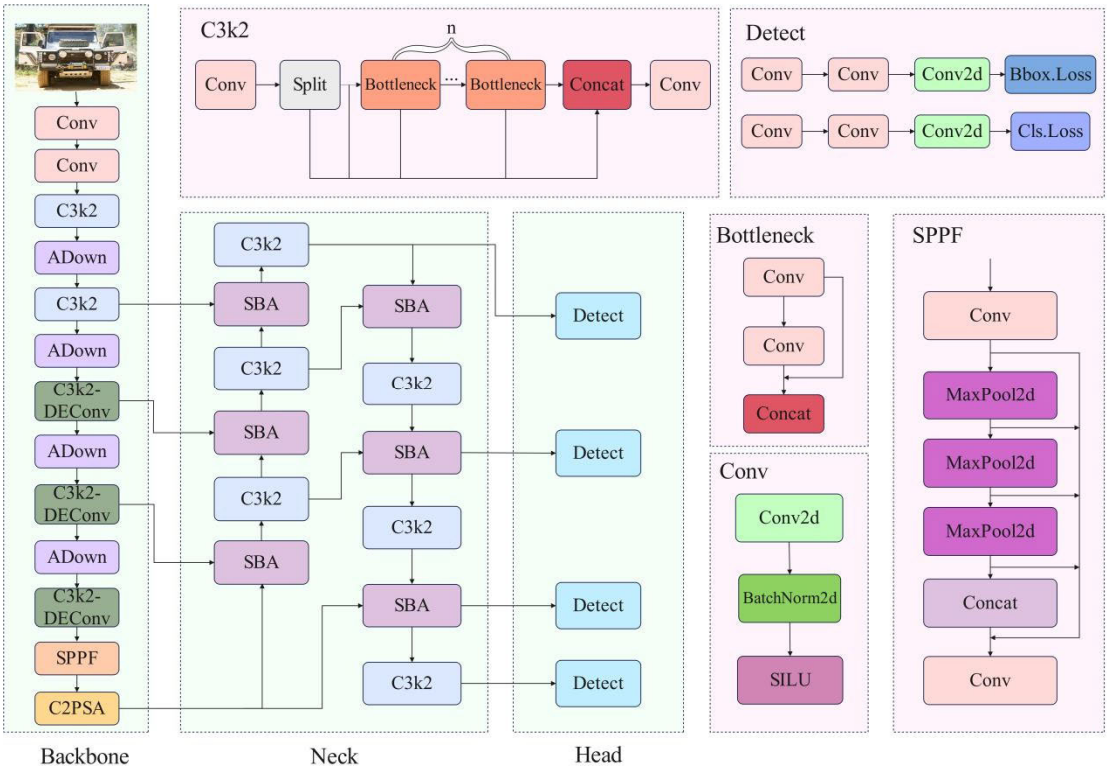

FIGURE 2. KJ-YOLO network structure diagram.

images using their smartphone's camera, provide a detailed description of the scene, and hear to recognize objects in those images. Wang et al. [11] developed the YOLO-OD navigation obstacle detection framework, which achieves differentiated processing of feature hierarchies through a feature weight balance component. The dynamic bottleneck structure is innovatively integrated to adapt to the multiscene feature extraction requirements, and an enhanced feature focusing head is constructed to improve the recognition sensitivity of tiny obstacles. Experimental validation shows that the scheme achieves an average detection accuracy of 30.02% on the standard test set, which provides an innovative exploration direction for the development of a navigation assistance system for visually impaired people. and Its technical path has an important reference value for the Hao et al. [12] effectively addressed the challenges faced by blindness and low vision in unfamiliar environments by creating a system utilizing a large pretrained base model and rapid engineering. Atitallah et al. [13] integrated DenseNet into the YOLOv5 backbone to improve the network architecture and increase speed and detection accuracy. The architecture is a new obstacle detection system based on enhanced YOLOv5 that addresses issues such as function reuse and data transfer. Liu et al. [14] proposed a pioneering smart finger braille typing system based on an emerging friction electric nanogenerator (TENG). The goal of this system is to help blind people without external help by developing a specialized weak-current signal processing circuit based on the unique characteristics of the TENG. The six dots of the Braille code are represented by six self-powered tactile (SPT) sensors strategically placed in both hands. By introducing this innovative Braille typing system, Braille literacy can be significantly improved, and the gap between them and the online world can be bridged. Li et al. [15] developed an intelligent navigation framework for mobile robots that innovatively integrates deep reinforcement learning and online learning mechanisms to construct an end-to-end decision-making system. The scheme forms a PER-DDQN reinforcement learning algorithm by integrating a two-branch Q-value estimation architecture, a competitive value network structure, and prioritized experience replay mechanism. Experiments show that the hybrid architecture effectively enhances the autonomous path planning and obstacle avoidance capabilities of mobile robots in dynamic environments, and its multimechanism synergy significantly strengthens the real-time and environmental adaptability of navigation decisions. Hekal et al. [16] introduced a pioneering assistive blindness aid system that utilizes YOLOv4-tiny for target detection and a hybrid face recognition model that combines HaarCascades, Histogram of Oriented Gradients (HOG) features, and a deep neural network to ensure the accurate recognition of both targets and faces.

III. KJ-YOLO NETWORK

The KJ-YOLO target detection algorithm shown in FIGURE 2 has several main contributions. First, we use the Adown module to replace the convolutional layer Conv of the original model YOLOv11n in the backbone network

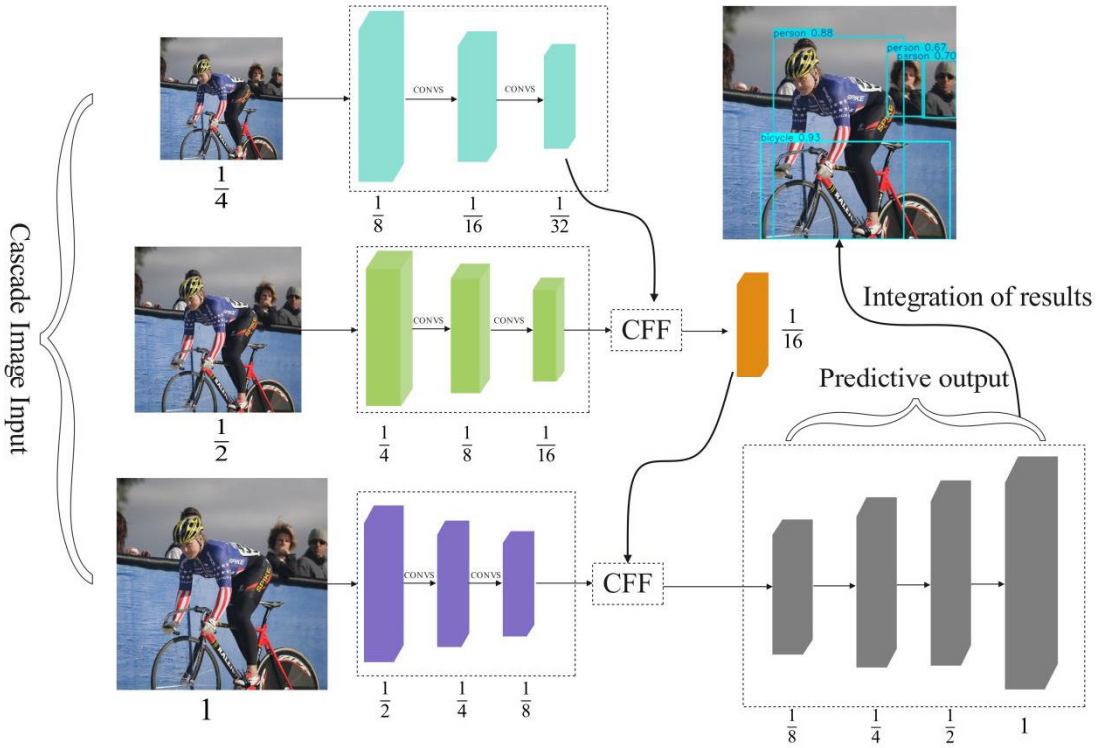

FIGURE 3. Cascade feature pyramid structure diagram.

architecture starting from the 3rd layer, which solves the problem of high computational complexity to a certain extent. Second, we deploy the self-developed C3k2-DEConv module in the cascade position of the 3rd, 8th, and 10th layer to enhance the feature extraction capability for small and multi-scale targets. Finally, the self-developed SBA module and the original C3k2 module are used to reconstruct the neck network to improve the feature fusion capability of the model. Compared to YOLOv11n and similar algorithms, this method effectively balances the weight and accuracy of the model.

A. SBA MODULE

In the YOLOv11n architecture, the feature fusion network of the PSA architecture based on the C2PSA module typically follows a top-down pattern. As the network depth increases, the receptive field gradually expands, and semantic information is continuously enriched. This design can effectively capture target features of different scales in an image and enhance the understanding and representation of complex scenes through deep feature maps.

However, in detection tasks applied to resource-constrained devices, the traditional PSA network architecture has significant limitations 1. Loss of small target features: As the network depth increases, the resolution of the feature map gradually decreases, resulting in the loss of small target features in the deep network, which affects the detection performance of small targets; 2. Separation of semantics and details: The separation of semantics and detailed information between deep feature maps and shallow feature maps limits the comprehensive understanding of the target. 3. Lack of cross-layer information interaction: The traditional architecture does not make full use of cross-layer information interaction, which limits the feature-fusion effect; 4. Poor adaptability: insufficient adaptability to targets of different scales and shapes, and a lack of flexibility.

Hence, this study introduces a self-designed SBA module inspired by the cascade feature pyramid structure. The cascade feature pyramid structure is illustrated in FIGURE 3, while the SBA module architecture is depicted in FIGURE 4. It is integrated with the C3k2 module in the original YOLOv11n framework to reconstruct the neck network. By enhancing the representation ability of feature maps through attention mechanisms and feature weighting, a more complex feature fusion mechanism was achieved.

$$H' = fc2(H) \tag{1}$$

$$L' = fc(L) \tag{2}$$

The SBA module preprocesses the input feature maps through the fc and $fc2$ fully connected layer functions, as shown in Eq.(1) and Eq.(2) where H and L represent the high-resolution and low-resolution feature maps, respectively, and the adjusted feature maps are obtained H' and L' used for the channel adjustment of the feature maps.

$$g_H = \sigma(H') \tag{3}$$

$$g_L = \sigma(L') \tag{4}$$

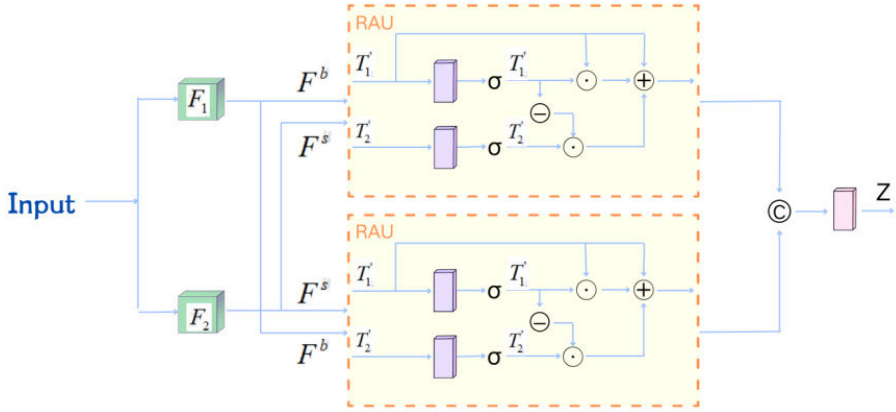

FIGURE 4. SBA module structure diagram.

The weights of the feature maps are dynamically adjusted using the *Sigmoid* function to highlight important features, as shown in Eq. (3) and Eq.(4), where σ denotes the activation function, and g_H and g_L denote the attentional weights of the high-resolution and low-resolution feature maps, respectively.

$$L_{enhanced} = L^{'} + L^{'} \cdot g_L + (1 - g_L) \cdot Upsample(g_H \cdot H^{'}, size = L^{'} \cdot size) \quad (5)$$

$$H_{enhanced} = H^{'} + H^{'} \cdot g_H + (1 - g_H) \cdot Upsample(g_L \cdot L^{'}, size = H^{'} \cdot size) \quad (6)$$

Meanwhile, the up-sampling fusion of cross-resolution features is dynamically adjusted by self-attention weights g_L and g_H *Upsample* to achieve complementarity of details and semantic information, as shown in Eq.(5) and Eq.(6) to enhance the characterization ability of multiscale features, where $L_{enhanced}$ is the enhanced low-resolution feature map and $H_{enhanced}$ is the enhanced high-resolution feature map.

$$H_{upsampled} = Upsample(H_{enhanced}, size = L_{enhanced}.size) \quad (7)$$

$$Z = conv(cat(H_{upsampled}, L_{enhanced})) \quad (8)$$

Finally, the enhanced high-resolution feature map $H_{enhanced}$ was upsampled to the same size as the enhanced low-resolution feature map $L_{enhanced}$, and the information of these two feature maps was integrated by splicing in the channel dimension, as shown in Eq.(7) to form the final output feature map, Z, as shown in Eq.(8).

The bidirectional fusion mechanism of the SBA module effectively enhances the target object feature representation by adaptively adjusting the multiscale features, which effectively solves the semantic gap problem of traditional methods. Accuracy of bounding box position regression.

B. C3K2-DECONV MODULE

In the core architecture of the YOLOv11n target detection framework, the C3k2 composite module, as a key component of the feature extraction network, was innovatively improved based on the design idea of the cross-stage partial network (CSP) architecture [17]. As shown in FIGURE 5, the module adopts a hierarchical feature fusion strategy, which significantly reduces computational complexity through the intelligent segmentation and reorganization mechanism of feature channels. The main body of the module consists of C3k2 base building units, each of which integrates an enhanced bottleneck layer design. Specifically, the improved bottleneck layer adopts a two-branch parallel structure, which consists of two consecutive 3×3 standard convolutional layers to form the feature transformation path, whereas the bypass branch establishes a shortcut connectivity channel through constant mapping. Theoretical analysis shows that this structure achieves feature reuse through residual cross-layer connections, which are realized as shown in Eq.(9).

$$Y = X + Conv_2(Conv_1(X)) \quad (9)$$

where $X \in R^{C \times H \times W}$ is the input feature map, and $Conv_1$ and $Conv_2$ are the two convolutional layers within the bottleneck.

However, in the target detection task oriented to intelligent blindness assistance scenarios, the traditional C3k2 module exhibited three key technical bottlenecks: 1. high-frequency detailed feature attenuation leads to asymmetric loss of the high-frequency component of the feature map; 2. The lack of a priori knowledge of orientation perception leads to insufficient ability to encode in the direction of the gradient, which renders the existing structure poorly covered by the multi-directional edge response ($\theta \in [0°, 180°]$) and significantly affects the recognition accuracy of complex obstacle contours; 3. The limited ability of multi-scale feature decoupling leads to the inability of the convolutional kernel in the fixed sensory field to dynamically adapt to scene-scale changes, which affects the generalization ability and robustness of the model.

To this end, this paper proposes an improved C3K2-DEConv module with the architectural idea of a cascading

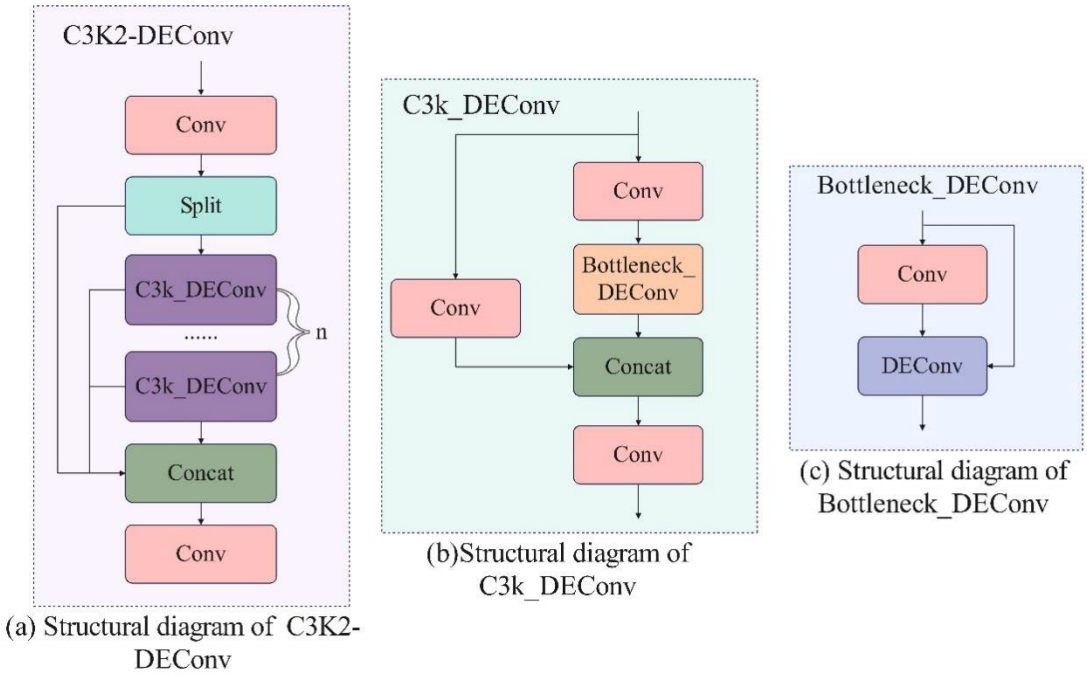

FIGURE 5. Structure diagram of C3K2-DEConv, C3k_DEConv, Bottleneck_DEConv.

feature pyramid structure in the C3K2 module, which replaces Bottleneck with Bottleneck_DEConv in the original model of C3K2. This module retains the multi-branch feature interaction mechanism of C3k2 but replaces the second Conv layer with C3K2-DEConv, as shown in Eq.(10).

$$Y = X + DEConv(Conv_1(X)) \tag{10}$$

Through residual linkage, the model strengthens its ability to convey detailed information while retaining the original features. The C3K2-DEConv module consists of several parallel C3k_DEConv submodules, and its overall structure comprises three stages: feature segmentation, multi-branch processing, and feature fusion. The specific process is as follows: firstly, feature segmentation is carried out, the input feature map X is divided into n sub-features X_i along the channel dimension, and then each sub-feature X_i is subjected to refinement branching processing through the C3k_DEConv submodule, and its internal Bottleneck_DEConv core operation is as in Eq.(11) and Eq.(12), and finally, all branch outputs Y_i' are dimensionally compressed by 1×1 convolution after channel splicing, and the principle of compression is shown in Eq.(13).

$$Y_i = \mathrm{Re}\,LU(BN(Conv_{1\times1}(X_i))) \quad i = 1, 2, \ldots, n) \tag{11}$$

$$Z_i = \alpha_i \odot ((Y_i + DEConv(Y_i)) \cdots\cdots (i = 1, 2, \ldots, n) \tag{12}$$

$$Z = Conv_{1\times1}(\bigoplus_{i=1}^{n} Z_i) \tag{13}$$

where $X_i \in R^n$ and $Conv_{1\times1}$ are used for dimensionality reduction, and DEConv is a detail-enhanced convolutional layer. $\oplus$ denotes the channel splicing operation $Conv_{1\times1}$ ensures that the output channel is consistent with the input.

DEConv [18] is an innovative convolutional structure whose structure is shown in FIGURE 6, which combines a priori information with multidirectional differential convolution to enhance the ability of the convolutional layer to capture image details and the richness of feature extraction. The key lies in the unique multidirectional difference convolution design, which includes central difference convolution (CDC), angular difference convolution (ADC), horizontal difference convolution (HDC), and vertical difference convolution (VDC). These convolutions can compute pixel differences from different directions to comprehensively capture the gradient information in the image and increase the diversity of features. In particular, HDC and VDC, which incorporate the gradient prior information of the edge detection operator into the convolutional layer by computing the differences in the horizontal and vertical directions, significantly enhance the model's capture of high-frequency information. The specific principles and formulas of multidirectional difference convolution are shown in (14), (15), (16), and (17).

$$W_{cd}^{(i,j)} = \begin{cases} w_{i,j} - \sum_{(m,n)\in\Omega} w_{m,n}, if\,(i,j) = (2,2) \\ w_{i,j,otherwise} \end{cases} \tag{14}$$

W_{cd} for the center difference convolution kernel, mainly through the second-order center difference constraint to correct the standard convolution kernel parameters, the principal process of correcting the parameters is shown in Eq.(14), which in turn enhances the sensitivity to the center pixel.

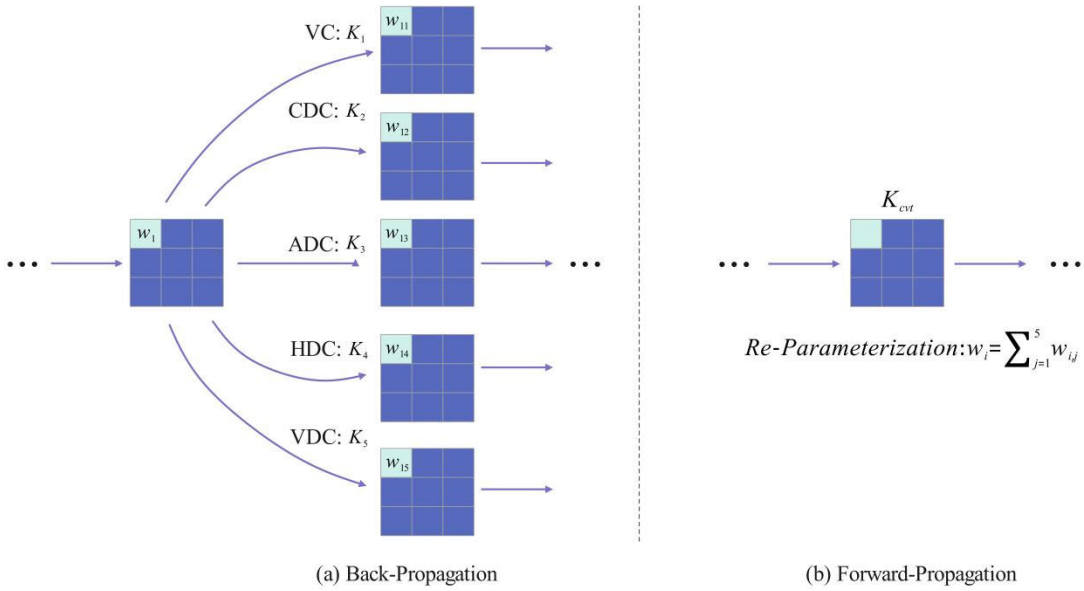

FIGURE 6. The process of reparameterization techniques for DEConv.

Where $w_{i,j}$ is the parameter of the standard convolution kernel at location, $\Omega = \{(i,j)\,|1 \le i,j \le 3\}$ which represents the coordinate space of the 3×3 convolution kernel.

Angular Difference Convolution (ADC):

$$W_{ad} = w - \theta \cdot w_{\frac{\pi}{4}} \tag{15}$$

W_{ad} of the anisotropic diffusion kernel by introducing a directional modulation factor to control the gradient directional response modulation principle process, as shown in Eq.(15), which enhances the diffusion ability in a specific direction. where w is the original convolutional kernel parameter, θ is the direction modulation factor to control the gradient direction response, $w_{\frac{\pi}{4}}$, and is the tensor of the kernel parameters after the 45-degree rotational arrangement of the kernel parameters.

Radial gradient kernel:

$$W_{rd}(p) = \begin{cases} w_k \cdot (1-\theta), & p = (3,3) \\ w_k \cdot \theta, & p \in \{(2,2),(2,4),(4,2),(4,4)\} \\ -w_k \cdot \theta, & others \end{cases} \tag{16}$$

Horizontal/Vertical Gradient Core (HDC/VDC):

$$W_{hd} = \begin{bmatrix} w_1 & 0 & -w_1 \\ w_2 & 0 & -w_2 \\ w_3 & 0 & -w_3 \end{bmatrix}$$
$$W_{vd} = \begin{bmatrix} w_1 & w_2 & w_3 \\ 0 & 0 & 0 \\ -w_1 & -w_2 & -w_3 \end{bmatrix} \tag{17}$$

W_{hd} for the horizontal gradient kernel captures the horizontal and vertical direction information by defining the antisymmetric kernel structure. The principle of capturing the horizontal and vertical direction information is shown in Eq.(17), where W_{vd} is the vertical gradient kernel, and w_1, w_2, w_3 is the kernel parameter.

Dynamic Nuclear Fusion Mechanism (DNFM):

$$Y = BN(\sum_{k=1}^{5} \alpha_k \cdot (W_k * X) + \beta \cdot X) \tag{18}$$

The principle of the output process is shown in Eq.(18) through the channel attention mechanism by the adaptive fusion of the five direction coding kernels through Y. And it is combined with the residual connection to enhance the model's ability to perceive different directional features, in which BN denotes the batch normalization, β denotes the weight of the residual connection, X denotes the input features, W_k is the K th direction coding kernel, $*$ denotes the convolutional operation, and α_k is the weight of the direction coding kernel assigned by the channel attention mechanism for the K th direction coding kernel. It is the weight assigned to the direction encoding kernel by the channel attention mechanism.

DEConv with the help of reparameterization technology, the training of multi-branch convolutional structure (including ordinary convolution and multi-directional difference convolution) equivalent conversion to a single ordinary convolutional layer equivalent transformation DEConv's reparameterization process is shown in Fig. 6 Principle of the process is shown in Eq.(19) and Eq.(20). During training, each convolutional layer independently updates the weights and propagates the gradient according to the chain rule; during inference, it integrates the weights to generate an equivalent convolutional kernel, which directly acts on the input feature map; thus, it does not add additional parameters and arithmetic burdens, but also strengthens the effect of feature extraction, improves the model's feature expression

and generalization ability, and makes the model capture key information more efficiently in the face of complex images. Thus, the model achieves both the dual purpose of optimizing the inference efficiency and guaranteeing performance. The model can capture key information more efficiently when faced with complex images to optimize reasoning efficiency and guarantee performance.

$$W_{deploy} = \sum_{k=1}^{5} W_k \quad b_{deploy} = \sum_{k=1}^{5} b_k \tag{19}$$

$$\forall X, DEConv(X) \equiv Conv(W_{deploy}, b_{deploy})(X) \tag{20}$$

where W_{deploy} is the convolution kernel parameter for the deployment phase, b_{deploy} is the bias parameter for the deployment phase, W_k, b_k is the class k direction-coding kernel and its corresponding bias, and $Conv$ is the standard convolution operation.

Compared with the original C3k2, the improved C3K2-DEConv significantly enhances the detailed features of the image, especially in the detail enhancement of edge and contour information; improves the feature extraction capability without adding additional parameters and computational costs, which remain unchanged through the reparameterization technique; and improves the generalization capability by enhancing the feature representation in different scenes to improve the generalization ability of the model, thus demonstrating better detection results in the application of smart blindness devices.

C. ADOWN MODULE

The traditional YOLO series of detection architectures commonly use the standard convolutional module Conv for image feature extraction and spatial downsampling, which has two limitations: first, the model training needs to rely on large-scale labeled datasets; second, the high computational load of the conventional convolutional operation leads to a significant decrease in the inference efficiency of the resource-constrained device. To address the above problems, this study proposes a lightweight adaptive downsampling module, ADown, whose core innovation lies in the integration of the dual-path dimensionality reduction strategy to achieve complexity control through parameter streamlining and computational flow optimization, as shown in FIGURE 7. The component adopts a reversible branching architecture and a multilevel feature compensation mechanism to effectively alleviate the information bottleneck problem in the feature transfer process.

The ADown module first performs (2×2) average pooling on the input feature maps from step 1 to preserve spatial details and capture subtle features to prevent the loss of information about small targets. The feature map is then divided into two parts, and the number of channels in each part is halved to reduce the number of parameters. One part of the feature map is subjected to maximum pooling to highlight small target features, and then features are extracted by a (1×1) convolution, and the other part is directly subjected

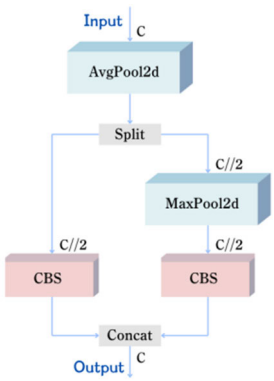

FIGURE 7. Downlink module structure diagram.

to a (3×3) convolution with moderate downsampling to reduce the computational amount. Eventually, the two parts of the feature maps are spliced along the channel dimension to provide rich context and detailed information for the network, which improves the navigation and obstacle avoidance performance of the smart guide device for recognizing and localizing small targets.

$$X_{avg} = AvgPool_{2\times2}^{stride=1,pad=0}(X) \tag{21}$$

The input feature map was subjected to average pooling without padding. 2×2 The principle of the pooling process is expressed by Eq.(21), where the average pooling operation is first performed on the input feature map, X, and $X \in R^{c_1 \times H \times W}$, where the size of the pooling window is 2×2,step size is 1, and padding is 0. The pooling operation does not change the dimensions of the feature map, and it can reduce the number of channels of the feature map while retaining more spatial details. The output dimensions are $X_{avg} \in R^{C \times (H-1) \times (W-1)}$, where X_{avg} is the average-pooled; the output dimension is C, where $C \times (H-1) \times (W-1)$ is the feature map after average pooling, and its dimension is, where is the number of channels, and H and W are the height and width of the feature map, respectively. Then, $Split(X_{avg})$ splits X_{avg} equally along the channel dimension into two parts: X_1, X_2 for double-path processing and $X_1, X_2 \in R^{\frac{C}{2} \times (H-1) \times (W-1)}$.

Path 1 (convolutional downsampling):

$$Y_1 = Conv_{3\times3}^{stride=2,pad=1}(X_1) \tag{22}$$

In path one, the feature map X_1 is convolved and downsampled, and the process is shown in Eq.(22), where $Y_1 \in R^{\frac{C}{2} \times \frac{H}{2} \times \frac{W}{2}}$ and X_1 are convolved to 3×3 with a step size of 2 and a padding of 1 to realize downsampling, and Y_1 is the output feature map and the dimension of the output feature map is $Y_1 \in R^{\frac{C}{2} \times \frac{H}{2} \times \frac{W}{2}}$.

Path 2 (pooling + projection):

$$X_{\max} = MaxPool_{3\times3}^{stride=2,pad=1}(X_2) \tag{23}$$

$$Y_2 = Conv_{1\times1}^{strid=1}(X_{\max}) \tag{24}$$

TABLE 1. Table of the experimental environment configuration.

Parameter	Experimental environment
Operating system	Windows11
CPU	Intel(R) Core(TM) i5-12400F
GPU	NVIDIA RTX 4060ti 16G
JRE	PyTorch-2.0.0,CUDA 12.1,Python 3.10

Pooling and projection operations were performed on the feature map X_2 in path two and its specific processing is shown in Eq.(23) and Eq.(24), firstly, the maximum pooling operation is performed on X_2 at 3×3 with a step size of 2 and a fill of 1, then the convolution operation is performed on the pooled feature map Y_2 at 1×1, and the dimensions of the output feature map are $Y_2 \in R^{\frac{C}{2} \times \frac{H}{2} \times \frac{W}{2}}$, finally the processed feature maps Y_1 and Y_2 of the dual path are spliced in the dimensions of the channel at $Y = Concat(Y_1, Y_2)$, to form the final output feature map Y with the dimensions of $Y \in R^{C \times \frac{H}{2} \times \frac{W}{2}}$.

Compared with the traditional Conv module in resource-limited intelligent assistive devices for the blind, this series of operations can reduce the number of parameters, reduce the complexity of the model, and simultaneously improve the detection of the target's feature extraction ability in a complex environment, more accurately identify and locate small targets in the environment, and improve the performance of obstacle avoidance.

IV. CONCLUSION OF THE EXPERIMENT AND RESULTS ANALYSIS

A. DATA SETS

The dataset selected in this study was the PASCAL VOC 2007 public dataset [19], which is mainly used for small-target detection. The dataset contains a total of 9963 images containing 20 classes which include people, cats, birds, cows, dogs, horses, goats, bicycles, motorcycles, trains, airplanes, boats, buses, automobiles, bottles, chairs, dining room tables, potted plants, sofas and televisions the number of detected objects is in total about 27,000,000and the density of detected objects is 3 per image. The average number of objects per class was 1,232, and the number of annotated objects was 24,640. During the experiment, the training, testing, and validation sets were split at a ratio of 8:1:1, and the dataset information is shown in FIGURE 8. This dataset features a wide variety of categories, but exhibits a relatively uneven distribution. In addition, small targets tend to be more concentrated in terms of spatial location and size, making them particularly suitable for target detection tasks in complex scenarios.

B. EXPERIMENTAL ENVIRONMENT AND PARAMETER CONFIGURATION OF THE DATA SET

To evaluate the model performance, the experiments were conducted using a preset hyperparameter configuration of the

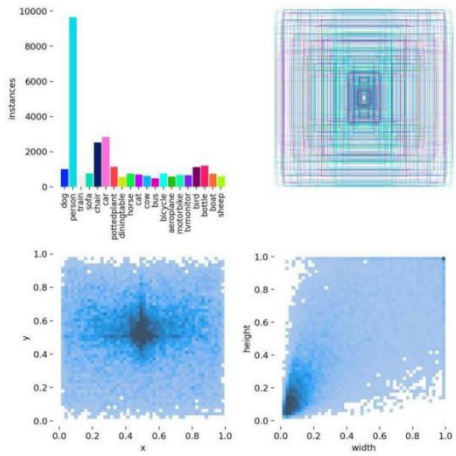

FIGURE 8. Data Set Infographic.

YOLOv11n benchmark architecture: the training framework was based on the stochastic gradient descent (SGD) optimizer, the input data resolution was fixed at 640×640 pixels, and the total number of training cycles was set to 300 rounds. The training parameters included a batch size of 32 samples/batch, and the initial value of the dynamic learning rate mechanism was set to 0.1, whereas the momentum parameter 0.937 and L2 regularization coefficient 0.0005 were configured to optimize the training stability. The detailed configuration parameters of the related hardware platform and software environment can be found in the test platform information listed in TABLE 1 and TABLE 2.

C. ASSESSMENT OF INDICATORS

To comprehensively assess the performance of the enhanced model, this study utilized a multidimensional evaluation framework. This framework integrates several critical technical indicators, namely classification accuracy (precision), detection recall (recall), mean average precision (mAP), real-time inference speed (FPS), computational complexity (GFLOPs), and model parameter size (M). Among these, mAP@0.5 evaluates the detection accuracy for a single category by setting an IoU threshold of 0.5, clearly reflecting the model's balance between accuracy and recall under a fixed evaluation standard. In contrast, mAP@0.5:0.95 adopts a dynamic threshold strategy, calculating the average precision across ten IoU thresholds ranging from 0.5 to 0.95 with a step size of 0.05. This provides a thorough examination of the robustness of the model in terms of multi-scale localization

TABLE 2. Table of the experimental value configuration.

Parameter	Experimental vale
Epochs	300
Batch Size	32
Learning Rate	0.002
Weight Decay	0.0005
Optimizer	SGD
SGD Momentum	0.937
Input Image Size	640 x 640

TABLE 3. Comparison table of test data using different neck modules.

Mode	mAP50/%	mAP50-95/%	FPS	M	FLOPs/G
RCSOSA[20]	63.1	41.2	182	4.2	195.7
GOLDYOLO	64.9	44.2	220	3.8	205.3
GFPN[21]	62.2	41.1	240	3.0	165.4
EfficientRepBiPAN[22]	57.1	37.4	**321**	**2.3**	**125.8**
AIFI[23]	63.7	43.6	195	4.0	190.2
AFPN-P2345	65.2	44.0	191	4.5	210.0
ASF-P2[24]	64.8	43.2	215	3.6	198.7
SBA	**66.1**	**44.5**	207	3.5	216.3

accuracy. The FPS metric, representing the real-time processing capability of the model, was measured in an environment with a batch size of 32, highlighting its efficiency in practical deployment scenarios.

$$\Pr ecision = \frac{TP}{TP + FP} \tag{25}$$

$$\mathrm{Re}\ call = \frac{TP}{TP + FN} \tag{26}$$

$$AP = \int_0^1 P(R)dR \tag{27}$$

$$mAP = \frac{1}{N}\sum_{i=1}^{N} AP_i \tag{28}$$

$\Pr ecision$ denotes the ratio between the number of targets TP correctly identified by the model and the total number of targets identified by the model, as shown in Eq. (25). Re$call$ denotes the ratio between the number of targets TP correctly identified by the model and the total number of targets present, as shown in Eq.(26). AP denotes the area under the $P - R$ curve of a target category, which is used to measure the performance of the model in a specific category, as shown in Eq.(27): mAP is the result of averaging the average accuracy of all detected target categories, which is computed as shown in Eq.(28), where N is the number of detected target categories, and $AP(i)$ is the average precision of the i target category All metrics are calculated when the IOU (intersection and integration ratio) threshold is set to 0.5.

D. EXPERIMENTAL RESULTS AND ANALYSIS

1) COMPARISON EXPERIMENTS USING DIFFERENT NECK NETWORKS

In order to study the influence of different neck networks on the overall detection performance of the model, we chose the self-developed SBA module to rebuild the neck network of YOLOv11n and integrate it into a complete network structure and compared it with other different neck networks integrated with YOLOv11n into a complete network structure. The comparison test results are shown in TABLE 3.

2) ABLATION EXPERIMENTS TO VERIFY THE EFFECT OF REPARAMETERIZATION AND COMPARATIVE EXPERIMENTS WITH IMPROVED C3K2 MODULES

In order to verify the statement in Section III-B that the DEConv reparameterization has "no change in parameters and zero increase in computation", we conducted ablation experiments: after replacing C3k2 with C3k2-DEConv, the parameter counts are all 37.2 M, and the FLOPs are reduced from 101.4 G to 101.3 G ($< 0.1\%$) (see TABLE 4), which is fully consistent with the theoretical analysis. To study the effect of the improved C3K2-DEConv module on the detection performance of the model, the enhanced C3K2-DEConv module based on the C3k2 module was selected to replace the original model's C3k2 module in this experiment. The model is compared with other models improved by the C3k2 module, and the results of the comparative experiments are shown in TABLE 5.

TABLE 4. Experimental data table comparing before and after C3k2 reparameterization.

Mode	mAP50/%	mAP50-95/%	FPS	M	FLOPs/G
C3k2	64.2	42.7	379	3.24	101.46
C3k2-DEConv	65.4	44.1	386	3.22	101.43
Difference (Δ)	**+1.2**	**+1.4**	7	-0.02	-0.03

TABLE 5. Comparison table of test data using different modified C3K2 modules.

Mode	mAP50/%	mAP50-95/%	FPS	M	FLOPs/G
C3k2-LSCD	61.4	40.6	420	2.8	95.0
C3k2-iRMB	62.5	41.2	395	3.0	100.2
C3k2-AdditiveBlock	62.0	39.9	435	2.5	88.6
C3k2-AKConv	64.7	43.5	355	3.5	115.0
C3k2-CaFormer	61.7	39.8	450	2.3	82.4
C3k2-ContextGuided	61.2	39.2	**460**	**2.1**	**78.9**
C3k2-UniRepLKNetBlock	64.5	42.8	370	3.4	110.5
C3k2-DEConv	**65.4**	**44.1**	386	3.2	101.4

TABLE 6. Compares different tests using different downsampling modules.

Mode	mAP50/%	mAP50-95/%	FPS	M	FLOPs/G
ContextGuidedDown[25]	61.2	41.3	120	4.8	152.3
SPDConv[26]	60.8	40.5	135	3.9	138.7
HWD	61.4	41.4	145	3.5	128.4
v7DS	60.3	40.2	95	5.2	168.9
SRF[27]	63.6	42.6	185	3.2	115.6
WaveletPool[28]	62.6	41.8	210	2.8	105.0
LDConv[29]	64.1	43.4	240	2.5	98.7
ADown[30]	**65.3**	**43.5**	**379**	**2.1**	**85.0**

3) COMPARISON EXPERIMENTS USING DIFFERENT DOWNSAMPLING MODULES

To study the impact of different downsampling algorithms on the model detection performance, we selected a variety of downsampling modules and the ADown downsampling module proposed in this paper to carry out comparative experiments, the results of which are shown in TABLE 6.

4) COMPARATIVE EXPERIMENTS BETWEEN KJ-YOLO AND OTHER MODELS

As can be seen from TABLE 7, KJ-YOLO achieves 67.3%/44.8% on mAP50/50-95, respectively, and mAP50 is second only to EDETR-R50; the number of parameters is only 2.9 M, and the FLOPs are 114.4 G, which is the lowest or the second lowest, and the inference speed is 377 FPS, which is second only to YOLOv4-tiny. Compared with YOLOv11n Compared to RTMDet-tiny, it improves over RTMDet-tiny by 3.3/2.3 pp, 0.8/0.56 pp, and 32 FPS; compared to REDETR-R18, it has comparable accuracy but with a 4-fold increase in speed and 6-fold reduction in parameters. Compared to YOLOv11n, the accuracy is improved by 3.3/2.3 pp and 0.8/0.56 pp and 32 FPS compared to RTMDet-tiny; compared to REDETR-R18, the accuracy is comparable, but the speed is improved by a factor of 4.5, and the parameters are reduced by a factor of 6.8, which results in an optimal trade-off between accuracy, speed, and model size.

5) ABLATION EXPERIMENTS

KJ-YOLO ablation test:

To further verify the impact of the improved modules and their combinations on enhancing the performance of the original model YOLOv11n, we conducted ablation experiments, and the results are shown in TABLE 8. The data in the table indicate that all modules introduced in this study contribute to improving the accuracy of the model.

TABLE 7. Table of experimental data comparing different models with KJ-YOLO.

Mode	mAP50/%	mAP50-95/%	FPS	M	FLOPs/G
YOLOv4-tiny	58.5	36.2	**455**	5.9	129.8
YOLOv5s	64.7	42.6	302	7.2	126.4
YOLOv7-tiny	61.5	39.5	365	6.1	122.0
YOLOv8n	63.4	41.1	395	3.1	120.5
YOLOv8s	66.8	44.5	285	11.5	125.8
YOLOv11n	64.0	42.5	323	**2.6**	**101.3**
RTMDet-tiny	66.5	44.2	345	3.2	118.7
REDETR-R18	65.8	43.3	125	19.8	152.3
REDETR-R50	**68.2**	44.6	83	34.8	253.1
KJ-YOLO	**67.3**	**44.8**	**377**	**2.9**	**114.4**

TABLE 8. Results of the KJ-YOLO ablation experiments.

SBA	C3K2-DEConv	ADown	mAP50/%	mAP50-95/%	FPS	M	FLOPs/G
×	×	×	64	42.5	323	2.6	101.3
√	×	×	66.1	44.0	207	3.5	216.3
×	√	×	65.4	44.1	386	3.2	101.4
×	×	√	65.2	43.4	**379**	**2.1**	**85**
√	√	×	66.8	44.3	297	3.7	178.4
√	×	√	66.5	44.5	325	2.8	152.8
×	√	√	66.1	44.6	364	2.6	94.6
√	√	√	**67.3**	**44.8**	377	2.9	114.4

FIGURE 9. Comparative visualization of YOLO11n and KJ-YOLO detection results.

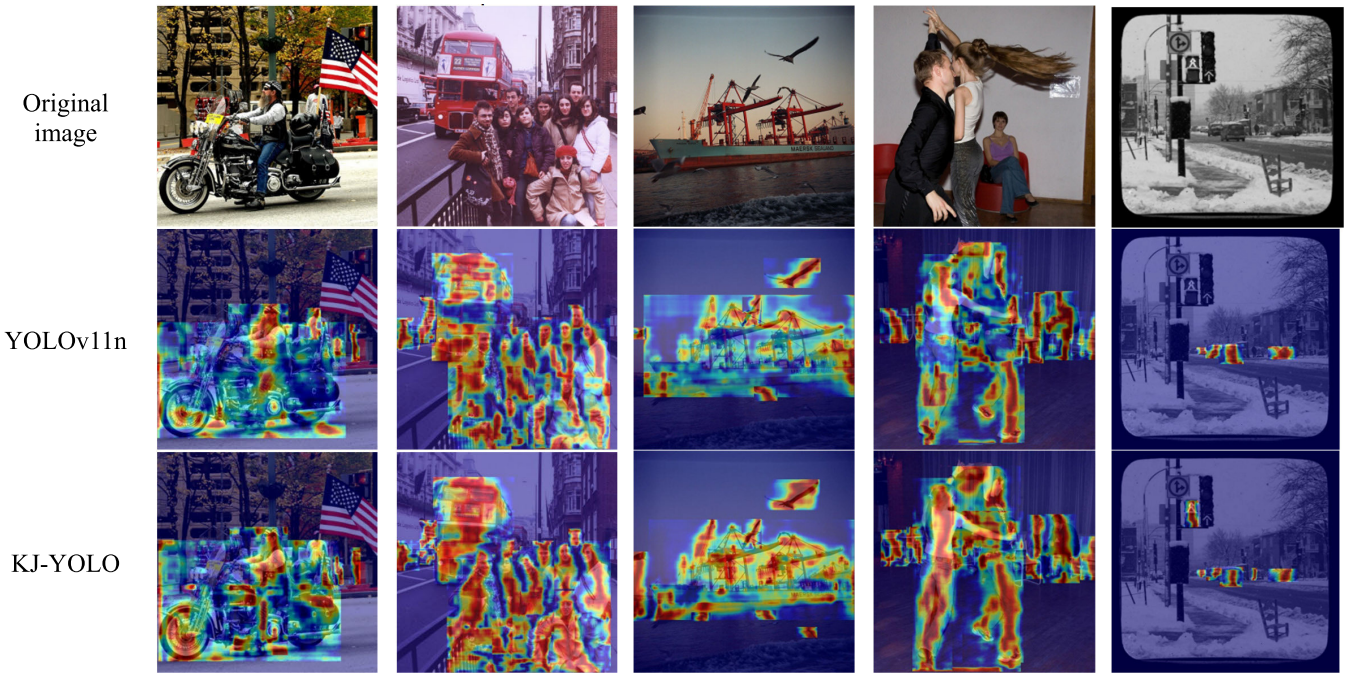

FIGURE 10. Grad-CAM comparison of KJ-YOLO and benchmark model YOLOv11n inspection visualization.

Specifically, when using the SBA module, the Adowm module, and the improved C3k2 modules, the mAP@0.5 increased by 1.5%, 1.6%, and 0.9%, respectively, and the mAP@0.5:0.95 performance improved by 2.1%, 1.2%, and 1.4%, respectively. The combination of the SBA and ADown modules increased the mAP@0.5 and mAP@0.5:0.95 performance by 2.5% and 2.0%, respectively, while the combination of the mAP@0.5 and mAP@0.5:0.95 with the C3K2-DEConv module improved the performance by 2.8% and 2.1%, respectively. When the ADown and C3K2-DEConv modules were used together, the mAP@0.5 and mAP@0.5:0.95 performances increased by 2.8% and 2.1%, respectively. When the ADown and C3K2-DEConv modules were combined, the mAP@0.5 and mAP@0.5:0.95 performances increased by 2.1% and 1.8%, respectively. When all three modules were used together, the mAP@0.5 and mAP@0.5:0.95 increased by 3.3% and 2.3%, respectively, ensuring that the accuracy values were improved while effectively controlling the computational complexity and maintaining the FPS and FLOP at 377 and 114.4. Future research efforts will involve the application of structured pruning techniques to further optimize KJ-YOLO for specific edge hardware.

From the analysis in FIGURE 9, it can be seen that the KJ-YOLO target-detection algorithm performs better than the YOLOv11n target-detection algorithm in multi-scale target detection and a large number of small targets. It also shows a better detection effect in scenes with complex backgrounds and serious target occlusions, which can better cope with real-time detection of various complex scenes and improve the accuracy of detection. As can be seen from the comparison of the thermograms in FIGURE 10, the activation value produced by KJ-YOLO in the target region is significantly higher than that of YOLOv11n, indicating that it achieves more accurate target focusing by enhancing the target feature response, which can improve the detection accuracy.

V. CONCLUSION

In this paper, we propose a target detection algorithm, KJ-YOLO, that has made significant progress in improving the accuracy and real-time performance of target detection in various indoor and outdoor living scenarios. Compared with previous studies, this study innovates and improves on several aspects, adopting a self-developed SBA module based on the cascading feature pyramid structure, which can better capture the features of small-scale and multi-scale targets, by introducing the C3K2-DEConv module, which is an improvement of the original C3K2 module by incorporating the cascading feature pyramid structure, thus achieving enhancement of details with no change in parameters. The use of the Adowm module also further reduces the parameters and computation amount, and improves the real-time detection rate.

Although the KJ-YOLO proposed in this study achieves optimal performance in terms of mAP50/% and mAP50-95/% metrics compared to other models with similar parameter counts, and significant progress has been made in detection accuracy and real-time performance, the algorithm still exhibits certain limitations. These include performance degradation under extreme lighting conditions or complex backgrounds, insufficient robustness in detecting extremely small or partially occluded targets despite improvements brought by the C3K2-DEConv module, and

suboptimal computational efficiency and model size for deployment on resource-constrained devices. To address these issues, future work will focus on constructing dedicated datasets for extreme climatic conditions to enhance environmental adaptability, validating generalization capability on larger and more diverse datasets such as MS COCO and domain-specific scenes (e.g., urban, rural, and indoor environments), and exploring synthetic data generation, multimodal fusion (e.g., radar and infrared), and advanced data augmentation techniques to improve robustness. We will also employ structural pruning, quantization, and other compression strategies to optimize deployment efficiency on embedded devices, introduce spatiotemporal context and target tracking mechanisms to enhance consistency in video stream processing, and investigate continuous learning techniques to enable rapid adaptation to new environments while maintaining performance. Furthermore, we will explore integrating KJ-YOLO with other advanced computer vision technologies such as semantic segmentation and instance recognition to enhance the functionality and user experience of blindness-assisting glasses, ultimately achieving more efficient and accurate target detection in real-world applications.

REFERENCES

[1] J. Huang, K. Wang, Y. Hou, and J. Wang, "LW-YOLO11: A lightweight arbitrary-oriented ship detection method based on improved YOLO11," *Sensors*, vol. 25, no. 1, p. 65, Dec. 2024.

[2] E. H. Alkhammash, "Multi-classification using YOLOv11 and hybrid YOLO11n-MobileNet models: A fire classes case study," *Fire*, vol. 8, no. 1, p. 17, Jan. 2025.

[3] M. Zhang, S. Ye, S. Zhao, W. Wang, and C. Xie, "Pear object detection in complex orchard environment based on improved YOLO11," *Symmetry*, vol. 17, no. 2, p. 255, Feb. 2025.

[4] S. Soudeep, M. A. Jahin, and M. F. Mridha, "Interpretable dynamic graph neural networks for small occluded object detection and tracking," 2024, *arXiv:2411.17251*.

[5] Z. Wang, Y. Su, F. Kang, L. Wang, Y. Lin, Q. Wu, H. Li, and Z. Cai, "PC-YOLO11s: A lightweight and effective feature extraction method for small target image detection," *Sensors*, vol. 25, no. 2, p. 348, Jan. 2025.

[6] J. Yu, X. Shi, W. Wang, and Y. Zheng, "LCG-YOLO: A real-time surface defect detection method for metal components," *IEEE Access*, vol. 12, pp. 41436–41451, 2024.

[7] Y. Chen, X. Yuan, J. Wang, R. Wu, X. Li, Q. Hou, and M.-M. Cheng, "YOLO-MS: Rethinking multi-scale representation learning for real-time object detection," *IEEE Trans. Pattern Anal. Mach. Intell.*, vol. 47, no. 6, pp. 4240–4252, Jun. 2025.

[8] Z. Ying, Z. Lin, Z. Wu, K. Liang, and X. Hu, "A modified-YOLOv5s model for detection of wire braided hose defects," *Measurement*, vol. 190, Feb. 2022, Art. no. 110683.

[9] C.-Y. Wang, H.-Y. Mark Liao, Y.-H. Wu, P.-Y. Chen, J.-W. Hsieh, and I.-H. Yeh, "CSPNet: A new backbone that can enhance learning capability of CNN," in *Proc. IEEE/CVF Conf. Comput. Vis. Pattern Recognit. Workshops (CVPRW)*, Jun. 2020, pp. 390–391.

[10] R. K. Pongiannan, J. Franklin, A. R. Pravin, M. Maria, and S. K. Mishra, "Object detection using deep learning for blind people with voice feedback," in *Proc. Int. Conf. Syst., Comput., Autom. Netw. (ICSCAN)*, Dec. 2024, pp. 1–5.

[11] W. Wang, B. Jing, X. Yu, Y. Sun, L. Yang, and C. Wang, "YOLO-OD: Obstacle detection for visually impaired navigation assistance," *Sensors*, vol. 24, no. 23, p. 7621, Nov. 2024.

[12] Y. Hao, F. Yang, H. Huang, S. Yuan, S. Rangan, J.-R. Rizzo, Y. Wang, and Y. Fang, "A multi-modal foundation model to assist people with blindness and low vision in environmental interaction," *J. Imag.*, vol. 10, no. 5, p. 103, Apr. 2024.

[13] A. Ben Atitallah, Y. Said, M. A. Ben Atitallah, M. Albekairi, K. Kaaniche, T. M. Alanazi, S. Boubaker, and M. Atri, "Embedded implementation of an obstacle detection system for blind and visually impaired persons' assistance navigation," *Comput. Electr. Eng.*, vol. 108, May 2023, Art. no. 108714.

[14] W. Liu, W. Yu, K. Li, S. Zhou, Q. Wang, and H. Yu, "Enhancing blind-dumb assistance through a self-powered tactile sensor-based Braille typing system," *Nano Energy*, vol. 116, Nov. 2023, Art. no. 108795.

[15] W. Li, M. Yue, J. Shangguan, and Y. Jin, "Navigation of mobile robots based on deep reinforcement learning: Reward function optimization and knowledge transfer," *Int. J. Control, Autom. Syst.*, vol. 21, no. 2, pp. 563–574, Feb. 2023.

[16] A. A. Hekal, M. S. Sharaf, A. A. Sayed, I. R. Abdelrahman, A. A. Salem, A. M. Elhussieny, and E. S. Abass, "Utilizing deep learning in smart glass system to assist the blind and visually impaired," *Future Eng. J.*, vol. 4, no. 2, 2024.

[17] Z. Chen, Z. He, and Z.-M. Lu, "DEA-Net: Single image dehazing based on detail-enhanced convolution and content-guided attention," *IEEE Trans. Image Process.*, vol. 33, pp. 1002–1015, 2024.

[18] T.-Y. Lin, P. Dollar, R. Girshick, K. He, B. Hariharan, and S. Belongie, "Feature pyramid networks for object detection," in *Proc. IEEE Conf. Comput. Vis. Pattern Recognit. (CVPR)*, Jul. 2017, pp. 2117–2125.

[19] M. Everingham, L. Van Gool, C. K. I. Williams, J. Winn, and A. Zisserman, "The Pascal visual object classes (VOC) challenge," *Int. J. Comput. Vis.*, vol. 88, no. 2, pp. 303–338, Jun. 2010.

[20] K. Wu, Y. Chen, Y. Lu, Z. Yang, J. Yuan, and E. Zheng, "SOD-YOLO: A high-precision detection of small targets on high-voltage transmission lines," *Electronics*, vol. 13, no. 7, p. 1371, Apr. 2024.

[21] M. Ren, X. Zhang, X. Chen, B. Zhou, and Z. Feng, "YOLOv5s-M: A deep learning network model for road pavement damage detection from urban street-view imagery," *Int. J. Appl. Earth Observ. Geoinf.*, vol. 120, Jun. 2023, Art. no. 103335.

[22] R. Ye, G. Shao, Y. He, Q. Gao, and T. Li, "YOLOv8-RMDA: Lightweight YOLOv8 network for early detection of small target diseases in tea," *Sensors*, vol. 24, no. 9, p. 2896, May 2024.

[23] M. Xie, H. Bian, C. Jiang, Z. Zheng, and W. Wang, "An improved YOLOv5 algorithm for tyre defect detection," *Electronics*, vol. 13, no. 11, p. 2207, Jun. 2024.

[24] M. Kang, C.-M. Ting, F. F. Ting, and R. C.-W. Phan, "ASF-YOLO: A novel YOLO model with attentional scale sequence fusion for cell instance segmentation," *Image Vis. Comput.*, vol. 147, Jul. 2024, Art. no. 105057.

[25] C. Zhong, H. Wu, J. Jiang, C. Zheng, and H. Song, "YOLO-DLHS-P: A lightweight behavior recognition algorithm for captive pigs," *IEEE Access*, vol. 12, pp. 104445–104462, 2024.

[26] Z. Gu, K. Zhu, and S. You, "YOLO-SSFS: A method combining SPD-Conv/STDL/IM-FPN/SIoU for outdoor small target vehicle detection," *Electronics*, vol. 12, no. 18, p. 3744, Sep. 2023.

[27] W. Lu, S.-B. Chen, J. Tang, C. H. Q. Ding, and B. Luo, "A robust feature downsampling module for remote-sensing visual tasks," *IEEE Trans. Geosci. Remote Sens.*, vol. 61, 2023.

[28] R. A. Elsheikh, M. A. Mohamed, A. M. Abou-Taleb, and M. M. Ata, "Improved facial emotion recognition model based on a novel deep convolutional structure," *Sci. Rep.*, vol. 14, no. 1, p. 29050, Nov. 2024.

[29] X. Zhang, Y. Song, T. Song, D. Yang, Y. Ye, J. Zhou, and L. Zhang, "LDConv: Linear deformable convolution for improving convolutional neural networks," *Image Vis. Comput.*, vol. 149, Sep. 2024, Art. no. 105190.

[30] G. Wen, M. Li, Y. Tan, C. Shi, Y. Luo, and W. Luo, "Enhanced YOLOv8 algorithm for leaf disease detection with lightweight GOCR-ELAN module and loss function: WSIoU," *Comput. Biol. Med.*, vol. 186, Mar. 2025, Art. no. 109630.

YUZHOU LIU was admitted to Guangdong Institute of Science and Technology (GIST), in 2023, where he is currently a Sophomore majoring in intelligent science and technology. His current research interest includes computer vision.

YILU HAO received the B.S. degree in built environment and energy applications from Anhui University of Technology, in 2018. He is currently pursuing the degree in computer science with Dongguan University of Technology. His research interests include computer vision and object detection.

SHU GONG received the master's degree in computer software and theory from Yunnan Normal University, Kunming, in 2009, and the Ph.D. degree from the Institute of Information and Communication Engineering, China University of Mining and Technology, Xuzhou, in 2022. In 2009, she joined the School of Computer Science, Guangdong University of Science and Technology, as a Professor. Her research interests include graph theory, fuzzy theory, and other fields.

RONG-GUEI TSAI received the master's degree in computer science from the National Chiayi University, Chiayi, Taiwan, in 2010, and the Ph.D. degree from the Institute of Manufacturing Information and Systems, National Cheng Kung University, Tainan, Taiwan, in 2019. In 2024, he joined the School of Computer Science, Guangdong University of Science and Technology, as an Associate Professor. His research interests include sensor networks, the Internet of Things, localization algorithms, and path planning.

CAIHUA QIU received the master's degree in systems theory from Guangdong Polytechnic Normal University, Guangzhou, in 2013, and the Ph.D. degree from Bulacan State University, Philippines, in 2023. In 2007, she joined the School of Computer Science, Guangdong University of Science and Technology, as an Associate Professor. Her research interests include digital image processing, object detection, data mining, and other fields.

MUYIN WANG was born in Chaozhou, Guangdong, in 2003. He is a Sophomore majoring in intelligent science and technology with Guangdong Institute of Science and Technology. His research interests include artificial intelligence and computer vision.